FREND LIGHTING INDUSTRIES PTY. LTD.
ABN 76 072 502 311

MANUFACTURERS OF SUPERIOR FLUORESCENT LUMINAIRES

14 JAYBEL ST., SALISBURY QLD 4107
PO BOX 268 SALISBURY QLD 4107
PHONE: (07) 3277 7222
FAX: (07) 3272 9000
EMAIL: sales@frend.com.au

CORVUS LED

IP40

The Corvus series downlights utilize state-of-art light emitting diodes as their light source. Only Quality German engineered components are used to guarantee service reliability and optimal performance. These energy-saving fit once and forget fixtures are designed for use in recessed ceiling applications. The Corvus downlight is supplied completely assembled within a die-cast aluminium body ready for installation.

FEATURES

- Cool beam of soft UV free light
- Engineered heat sink technology for optimum life
- Range of white light colour temperatures to suit specific applications from 3300k—6500k
- Beam angle of 25°
- Low energy consumption of 12 watts - 0.5 Amperes
- Stabilised LED power supply
- White powder-coated die-cast housing
- Serviceable for future advances in LED technology
- Suitable for spot lighting and general observation tasks
- IP40 protection from below ceiling
- Assembled in Australia

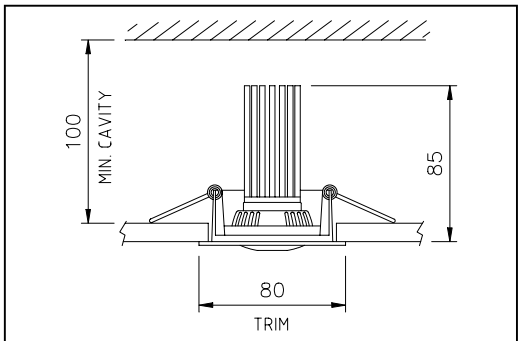

DOWNLIGHT DIMENSIONS

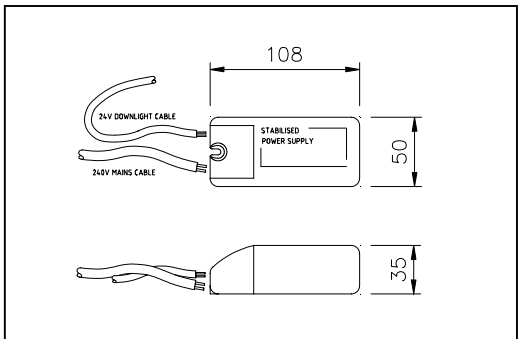

POWER SUPPLY DIMENSIONS

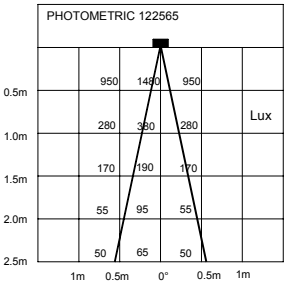

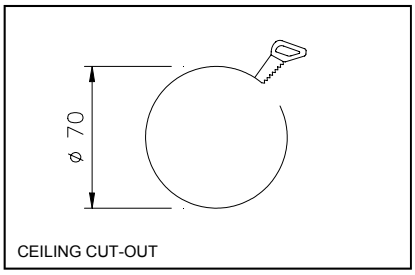

CEILING CUT-OUT

Code	Description	Lense	Weight
ITDL 122533	Corvus LED Downlight 3300k c/w Stabilised power supply	Diffuse	0.4 kg
ITDL 122547	Corvus LED Downlight 4700k c/w Stabilised power supply	Diffuse	0.4 kg
ITDL 122554	Corvus LED Downlight 5400k c/w Stabilised power supply	Diffuse	0.4 kg
ITDL 122565	Corvus LED Downlight 6500k c/w Stabilised power supply	Diffuse	0.4 kg

SPECIFICATIONS SUBJECT TO CHANGE WITHOUT NOTICE